REVISION RECORD				
REV.	DESCRIPTION	ECN No.	APPROVED	DATE

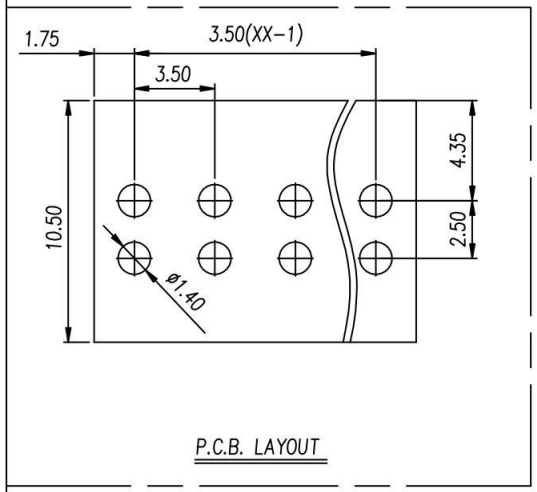

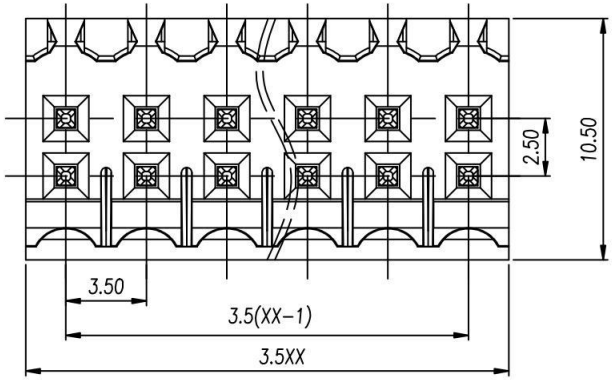

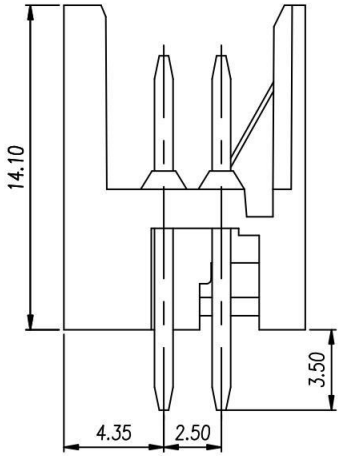

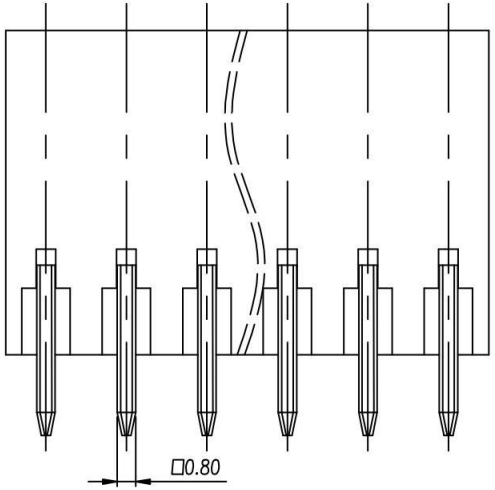

UL/CUL 技术 参数 UL/CUL Technical Data				
等 级	Use Group	B	C	D
额定电压	Rated Voltage [V]	150	–	–
额定电流	Rated Current [A]	7	–	–
接线范围 单/多芯线	Wire Range Solid/Stranded [AWG]	/		
耐电压	Withstanding Voltage	1300V/1Min		
IEC 技术参数 IEC Technical Data		IEC 61984		
过电压类别	Overvoltage Category	III	III	II
污染等级	Contamination Class	3	2	2
额定电压	Rated Voltage [V]	80	125	250
额定电流	Rated Current [A]	10	10	10
额定冲击电压 Impulse withstand voltage [KV]		2.5	2.5	2.5
导线截面积 硬质/柔性导线	Conductor cross section Solid/ flexible [mm²]	/		
材 料	Material			
绝缘材料	Insulation Material	PA66		
阻燃等级	Imflammability	UL94V-0		
导体材料	Contactor Material	铜合金 Copper alloy		
导体镀层	Contactive Coating	镀锡 Sn Plated		
一般参数	Other Data			
间距	Pitch [mm]	3.5		
极数	Poles [P]	2*02~2*24		
剥线长度	Stripping Length [mm]	/		
螺丝	Screw	/		
扭矩	Torque(Max) [N.m]	/		
工作温度	Operating temperature [°C]	-40~105		

linear dimension(Tolerances Standard GB/T 14486-2008)								—	▱	⊥
variable range	to 6	over 6 to 10	over 10 to 30	over 30 to 60	over 60 to 100	over 100 to 160	over 160 to	to 10	over 10 to 100	over 100 to
tolerance	±0.20	±0.30	±0.50	±0.70	±1.00	±1.30	±1.60	0.10	0.30	0.60

Contact:sales@nbkafeng.com

单位 / UNITS	mm	尺寸 / SIZE	A4	比例 / SCALE	3:1	第三视角/THIRD ANGLE PROJECTION	版本 / REV	V0
宁 波 咖 峰 电 子 有 限 公 司 NINGBO KAFENG ELECTRONIC CO.,LTD						名称 / TITLE	KF15EDGVHS-3.5-2*XXP	